CONTENTS:

REVISION HISTORY:

23/01/2014 - V1.0

18/02/2014 - V1.1

10/04/2014 - V1.2 - Production Version

Title: Raspberry Pi Compute Module IO Board		Drawn By: James Adams	
Size: A3	Ref: RPI-CMIO		Rev: 1.2
Date: Thursday, April 10, 2014		Sheet 1 of 3	

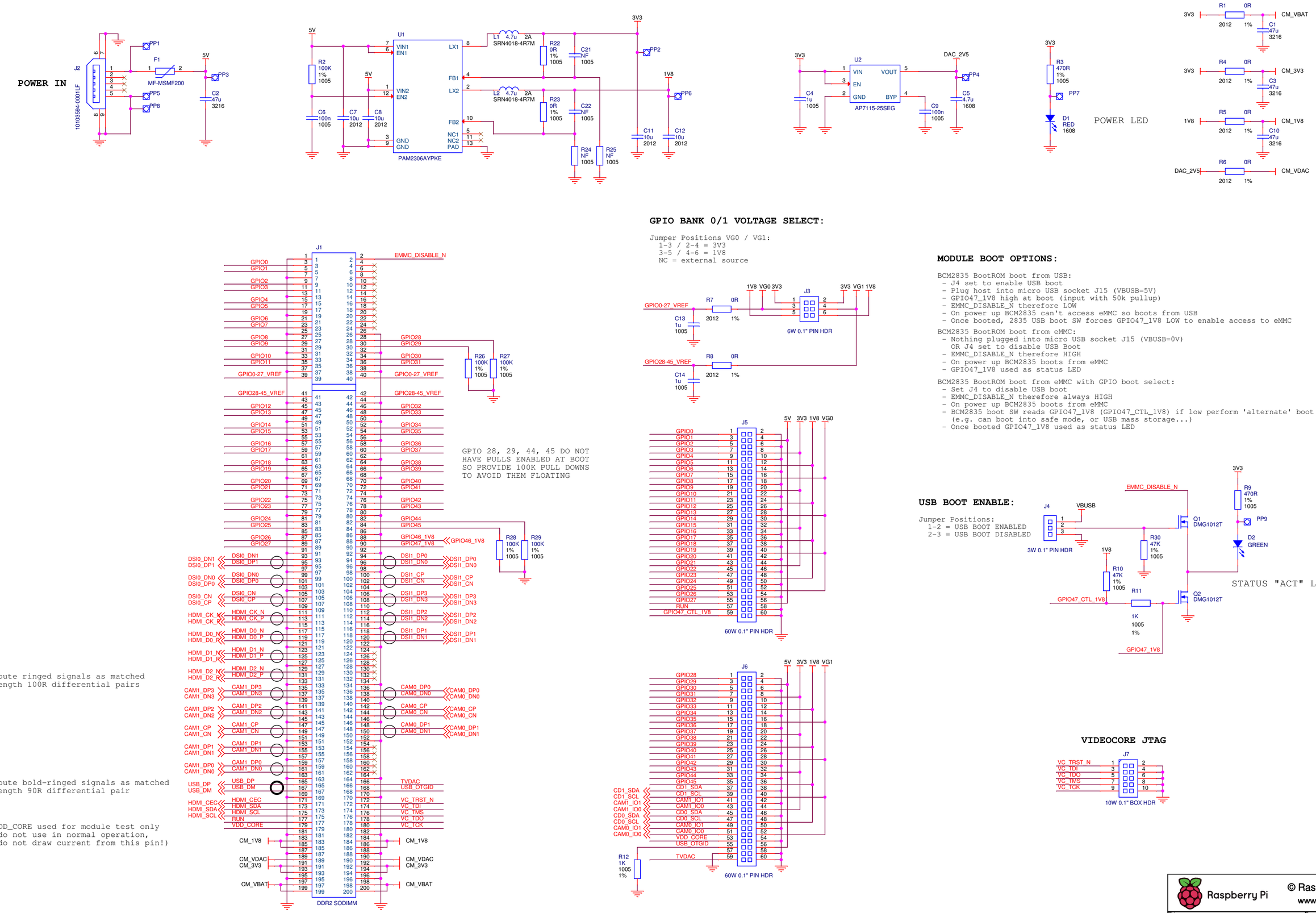

Raspberry Pi
www.raspberrypi.org

Title	Raspberry Pi Compute Module IO Board	Drawn By	James Adams
Size A2	Ref RPI-CMIO		Rev 1.2
Date: Thursday, April 03, 2014	Sheet 2 of 3		

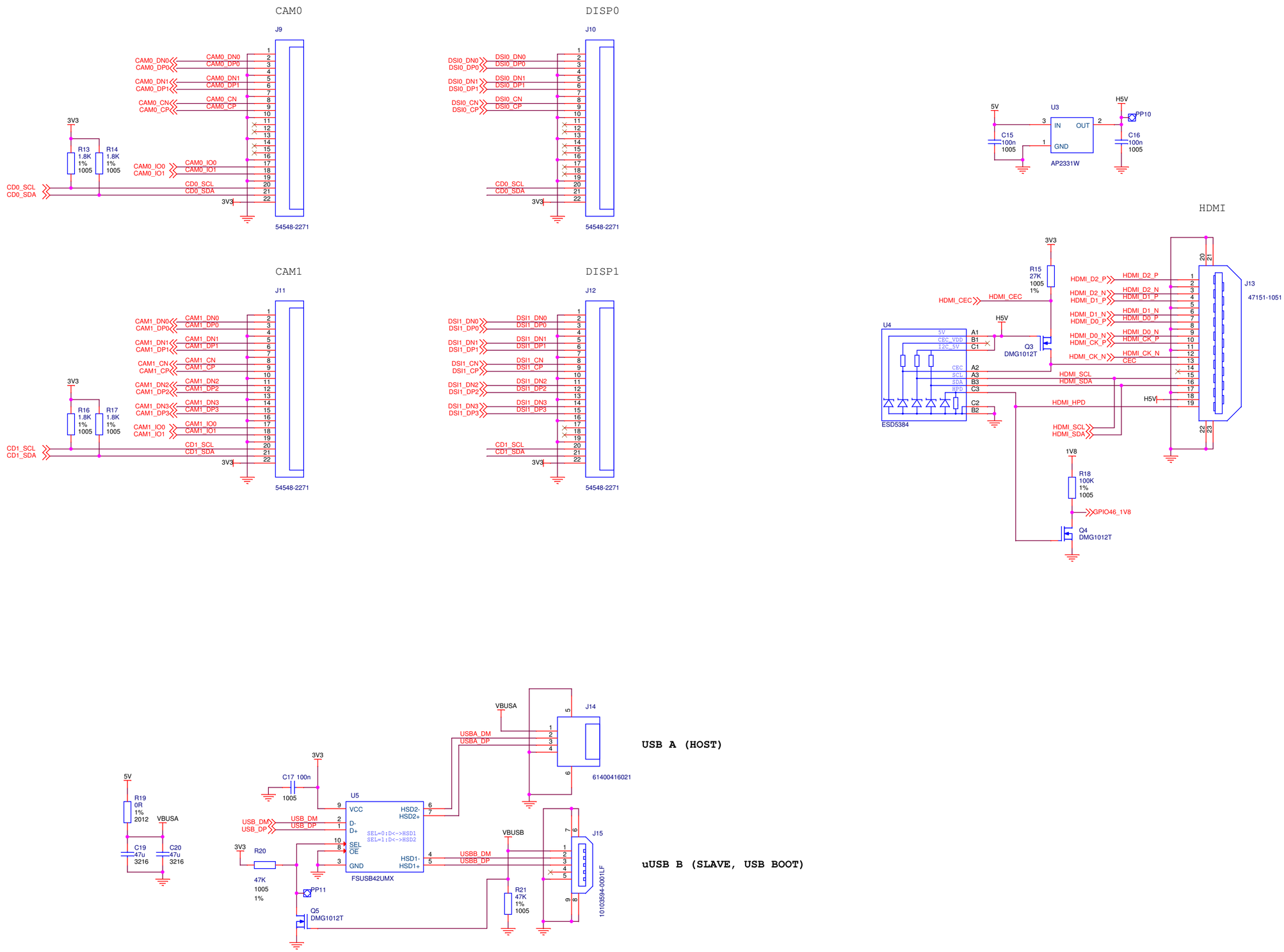

Raspberry Pi

www.raspberrypi.org

Title: Raspberry Pi Compute Module IO Board		Drawn By: James Adams	
Size: A2	Ref: RPI-CMIO		Rev: 1.2
Date: Thursday, April 10, 2014	Sheet 3 of 3		

CONTENTS:

REVISION HISTORY:

23/01/2014 - V1.0

03/04/2014 - V1.1 - Production Version

BLOCK DIAGRAM:

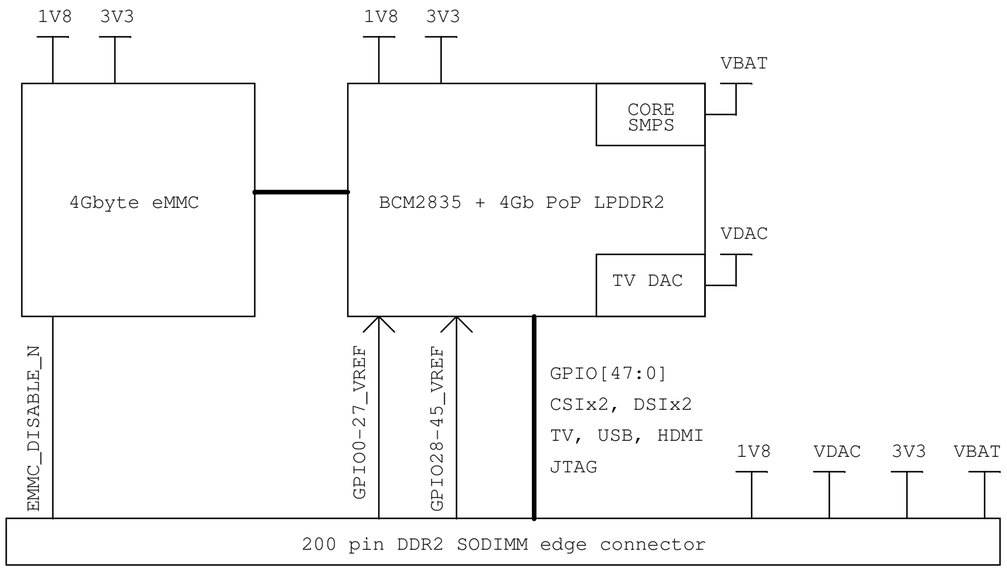

Title: Raspberry Pi Compute Module		Drawn By: James Adams
Size: A3	Ref: RPI-CM	Rev: 1.1
Date: Thursday, April 03, 2014	Sheet 1 of 4	

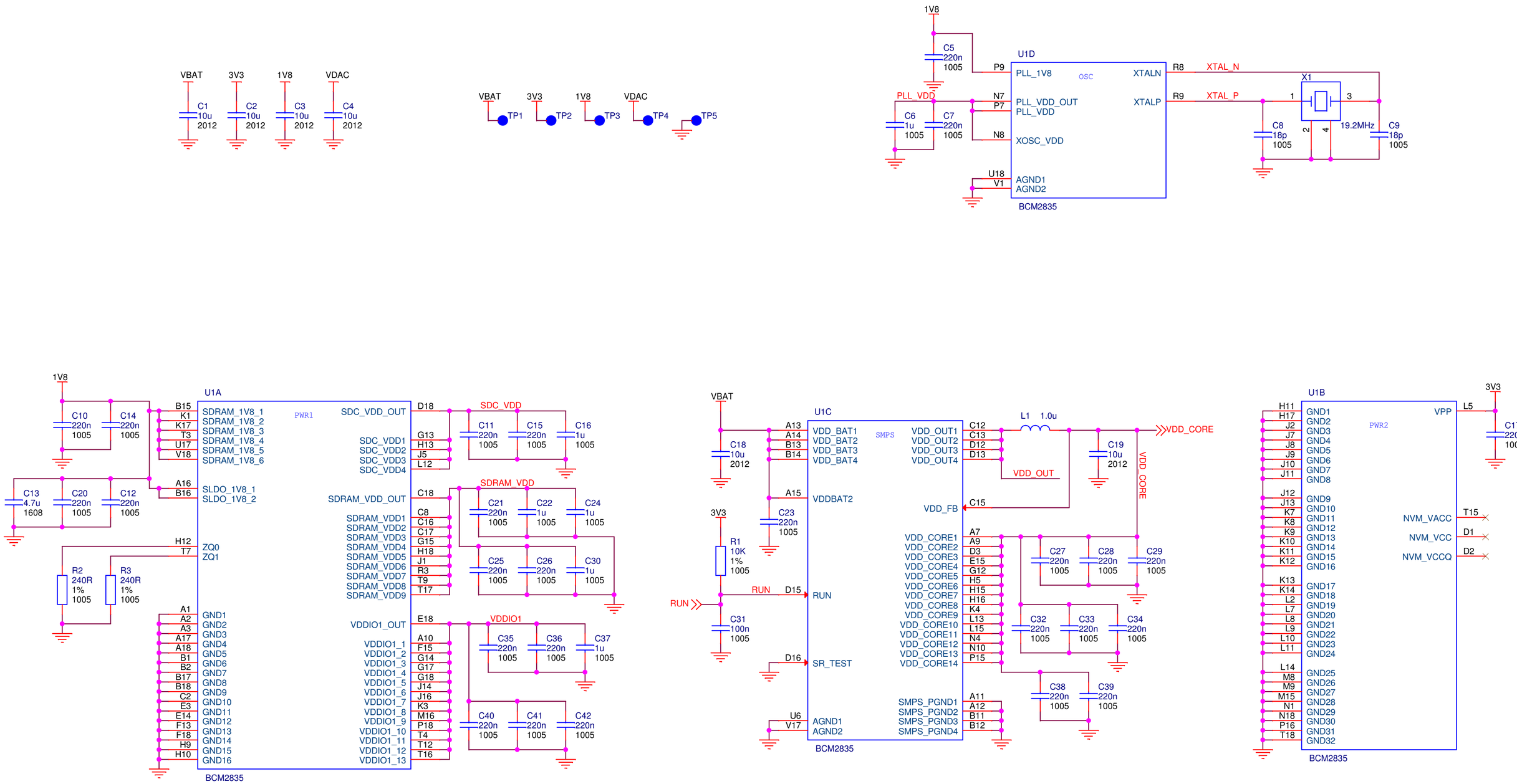

Raspberry Pi

www.raspberrypi.org

Title: Raspberry Pi Compute Module		Drawn By: James Adams	
Size: A3	Ref: RPI-CM		Rev: 1.1
Date: Thursday, April 03, 2014		Sheet 2 of 4	

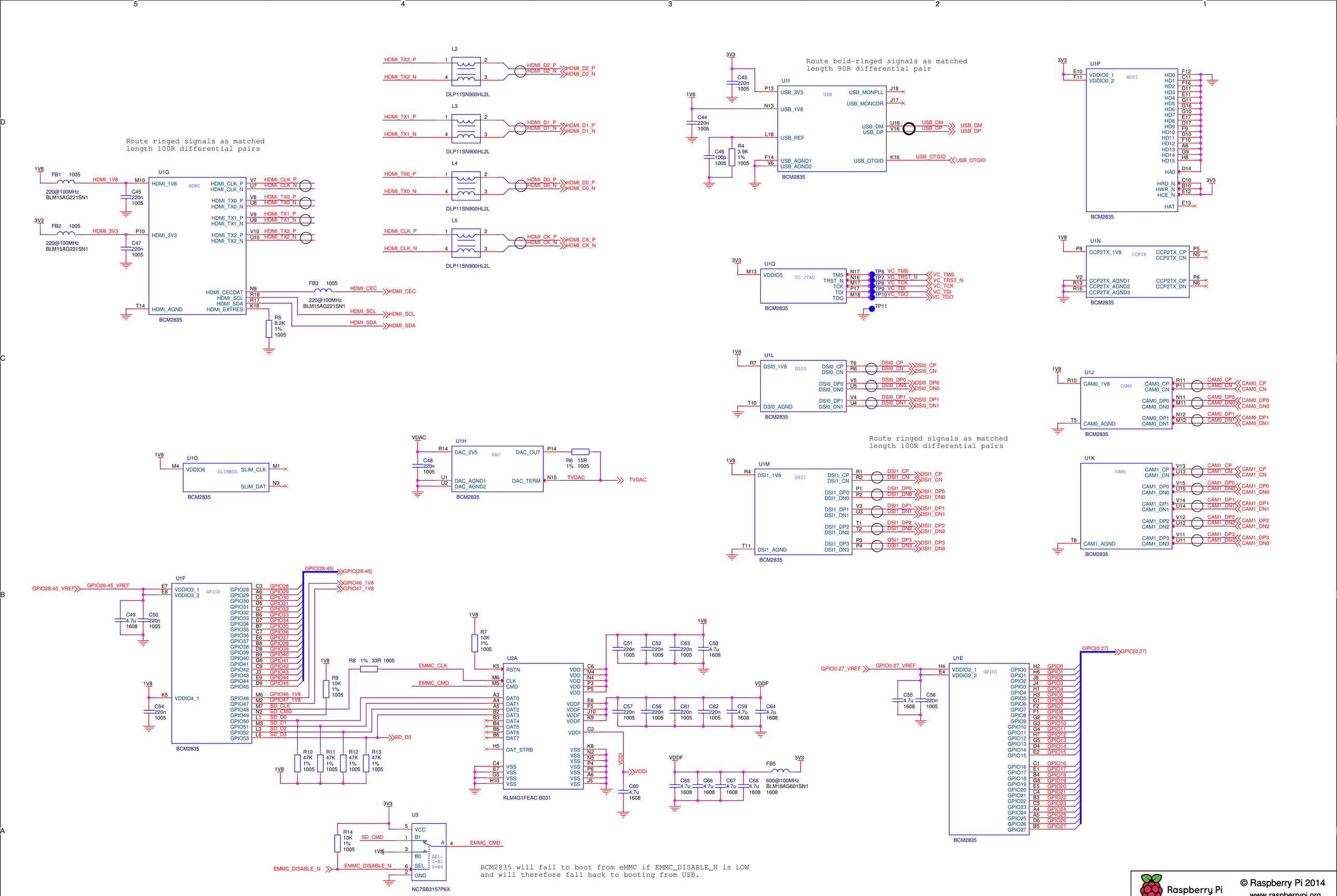

Raspberry Pi

www.raspberrypi.org

Title: Raspberry Pi Compute Module		Drawn By: James Adams	
Size: A2	Ref: RPI-CM		Rev: 1.1
Date: Thursday, April 03, 2014	Sheet 3 of 4		

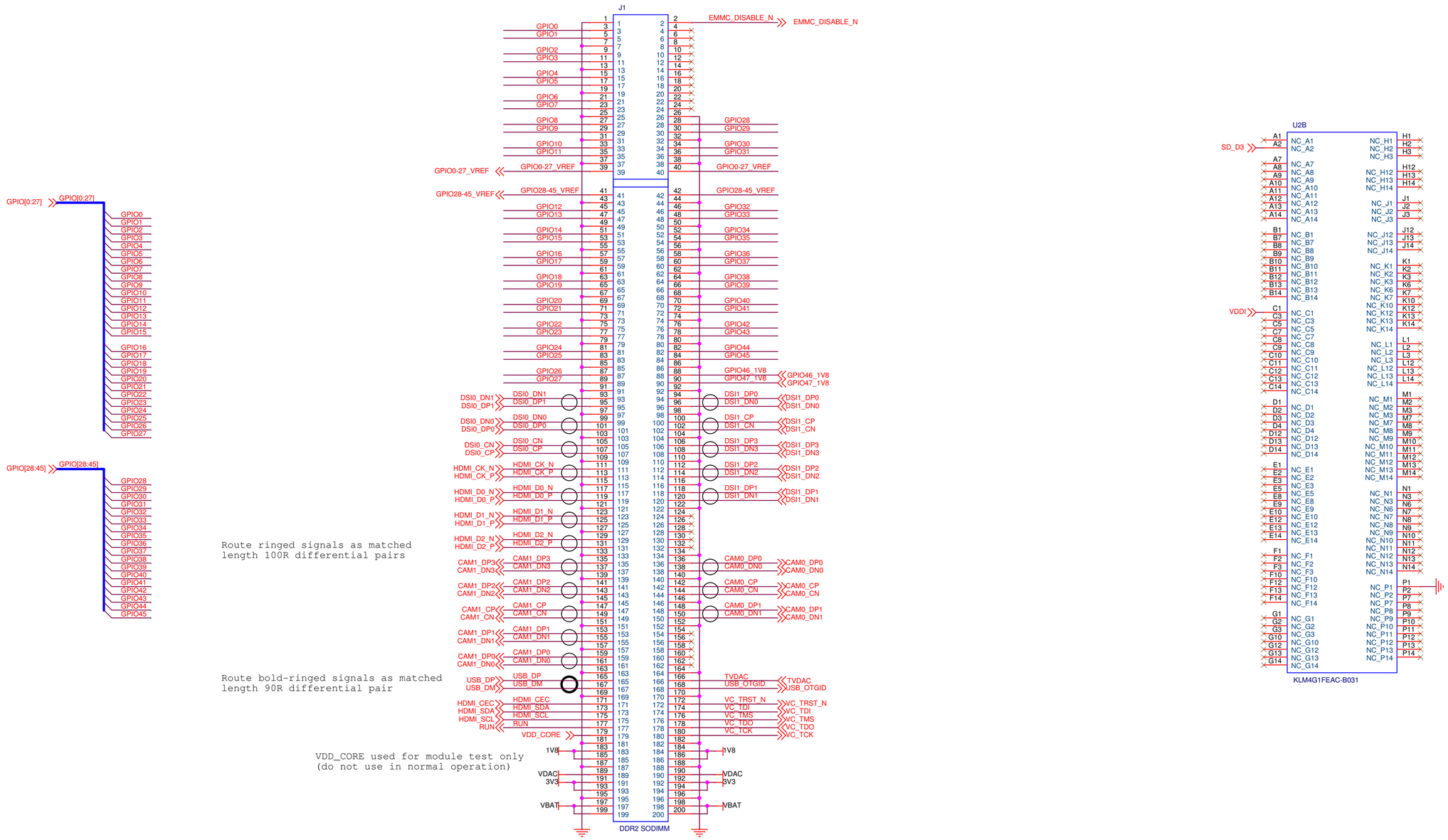

Title: Raspberry Pi Compute Module		Drawn By: James Adams	
Size: A2	Ref: RPI-CM		Rev: 1.1
Date: Thursday, April 03, 2014	Sheet 4 of 4		

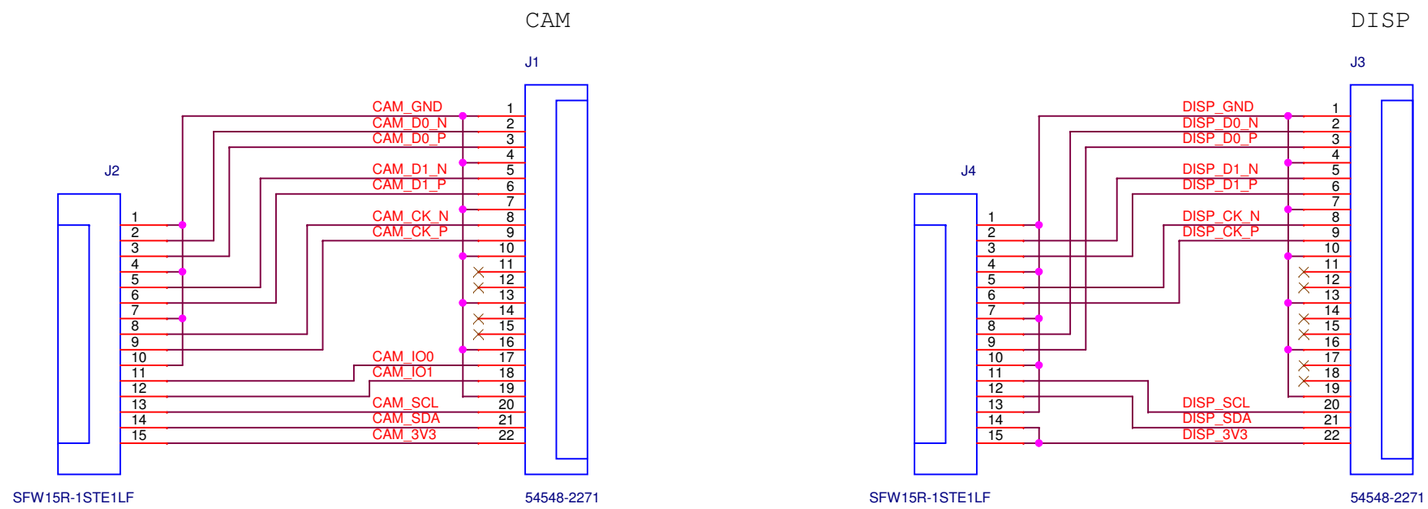

www.raspberrypi.org

Title: Compute Module Cam/Display Adaptor		Drawn By: James Adams	
Size: A3	Ref: RPI-CMCDA		Rev: 1.1
Date: Friday, April 11, 2014		Sheet 1 of 1	